ArcReach® Wire Feeders

Issued February 2022 • Index No. M/6.55 UK

Voltage-Sensing Wire Feeder

Quick Specs

Heavy Industrial Applications
Construction
Shipbuilding
Heavy manufacturing
Rental

Processes
MIG (GMAW)
Flux-cored (FCAW)
Pulsed MIG (GMAW-P)*
RMD®*

Input Power
14–48 VDC operating voltage,
110 VDC maximum OCV

Wire Feed Speed
SuitCase 8 and 12: 1.3–19.8 m/min.
Smart Feeder: 1.3–12.7 m/min.

Net Weight
SuitCase 8: 13 kg
SuitCase 12: 15.9 kg
Smart Feeder: 23 kg

**Available with ArcReach® Smart Feeder only.*

DONT WALK WELD™

Game-changing welding and pre-heating technologies can stop you from wasting hours every day.

ArcReach® welding technology minimizes the non-value-added time spent walking to and from the power source — and maximizes arc-on time, weld quality and jobsite safety.
When operators have complete control at the feeder or remote — even hundred metres away from the power source — it minimizes downtime and maximizes productivity, while improving operator safety and delivering high quality welds.

- More Jobsite Productivity and Efficiency
- Increased Uptime
- Improved Jobsite Safety
- Maximum Fleet Compatibility
- More Operator Control

ArcReach® wire feeders are compatible with:

- **XMT®350 FieldPro™**
- **XMT®350 FieldPro™ with Polarity Reversing**
- **Big Blue® 400X Pro**

ArcReach®

Full voltage control from the wire feeder without the need of a control cable.

TRUE BLUE® 3YR. WARRANTY

Wire feeder is warranted for three years, parts and labor.

Miller®

ArcReach® Wire Feeders Benefits

More Jobsite Productivity and Efficiency

ArcReach® capabilities eliminate the time spent tracing weld cables tens of meters back to the power source because weld operators can make adjustments at the ArcReach® wire feeder or remote.

- **Cable Length Compensation (CLC™)** ensures that the voltage a weld operator sets is the voltage they get by automatically adjusting voltage based on weld cable length, even hundred meters away from the power source.

Increased Uptime

ArcReach® feeders and remotes have been extensively field-proven and deliver the performance you need with ruggedly constructed internal components.

- **No more expenses related to maintaining or replacing easily damaged control cords** because the weld cables are used to communicate weld parameters between the wire feeder and power source.

Improved Jobsite Safety

The chances of slip, trip or fall injuries are decreased because ArcReach® technology allows weld operators to make parameter changes at the wire feeder/remote instead of having to travel through multistory and cluttered jobsites back to the power source.

Maximum Fleet Compatibility

Maximize fleet compatibility and get the benefits of ArcReach® when you pair ArcReach® welders and feeders with other ArcReach® compatible products.

More Operator Control

More control for weld operators with quick, easy adjustments at the wire feeder/remote.

- **Weld operators can Adjust While Welding (AWW™)** to change weld parameters while the arc is on.
- **Inadvertent parameter changes by other jobsite workers can be easily avoided** because connecting an ArcReach® accessory from the power source automatically locks out the power source's panel controls.
- **Return to a previous weld process faster** because the power source is restored to its previous settings once the ArcReach® accessory is removed.
- **Decrease the chance of an incorrect weld process being used** because Auto-Process Select™ automatically sets the power source to the correct weld process based on the polarity applied to the weld accessory.

ArcReach®

Remote control of the power source without a control cord.

ArcReach® technology uses the existing weld cable to communicate control information at the feeder, ArcReach® Heater or remote and power source. This technology eliminates the need for control cords, and their associated problems and costs.

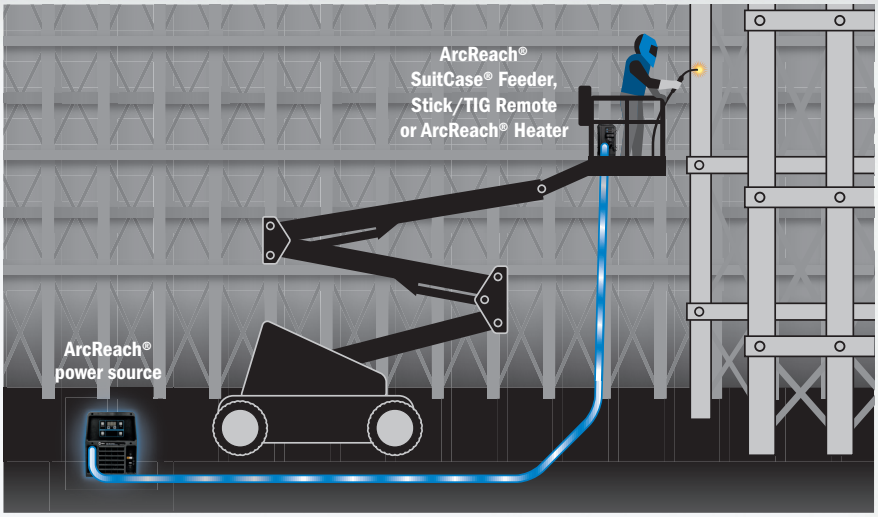

ArcReach® SuitCase® 8 and 12 Features

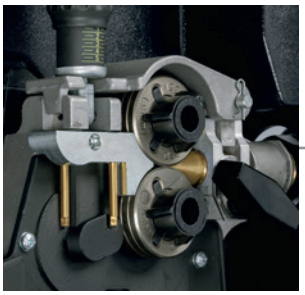

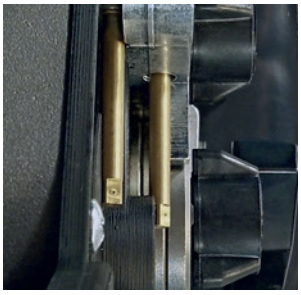

Ultra-low drag inlet guide pins make loading the wire easy and do not deform the wire on the way into the drive rolls. Simply thread the wire through the pins and into drive rolls. There are two ways to advance the wire through the drive roll and into the gun. Either open the pressure arm and thread the wire into the grooves in the drive roll and on into the gun inlet or place the wire between the pins and use the jog/purge switch to advance the wire through the drive roll.

Scaled wire pressure knob provides easy adjustment and consistent pressure on the drive rolls and wire.
Wire drive and motor assembly is specifically designed for mobile welding applications to provide smooth and consistent wire delivery. Improved motor torque and drive roll system are designed to feed small diameter solid wire (0.6 mm) to large diameter cored wire (2.0 mm).

Electronic wire feed speed control with integrated tachometer ensures wire feed speed accuracy and consistency that rivals the best benchtop feeders — making it easier to produce quality welds.

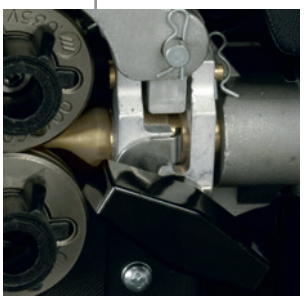

Gun locking tab works with guns having corresponding locking grooves to prevent gun from being pulled out if the feeder is dragged by the gun.

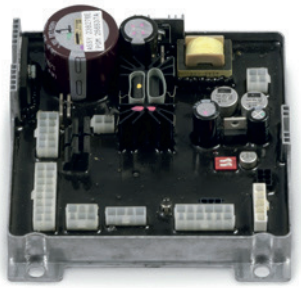

Potted and trayed main printed circuit board for the harshest environments adds exceptional reliability. Board has full-trigger isolation so a shorted gun trigger will not affect feeder operation.

Digital meters with SunVision™ technology can display voltage and wire speed, and also amperage if desired. Meters can be seen clearly even in direct sunlight.

Polypropylene case with built-in slide rails and the ability to open the door to change wire with feeder in vertical position.

Wire speed dual schedule reduces wire speed to 87.5% of standard speed. Requires a dual schedule gun or dual schedule switch (sold separately).

Gas inlet recessed into back of case is protected from incidental contact by the weld cable, ensuring consistent and contaminant-free shielding gas delivery to the gun.
Double-filtered gas valve helps keep dirt from clogging and affecting gas flow.

ArcReach® SuitCase® 8 and 12 Features

Setting the standard for performance.
Heavy-duty drive motor with tachometer control provides wire feed speed that is accurate and consistent from the start of the weld to the finish and from one weld to the next, which provides consistent arc quality. Front panel has trigger hold, wire jog, and gas purge for easy operator access. Wide voltage range for small and large wires with no contactor chatter or arc outages.

Set volts and wire feed speed remotely.
The simple interface on the feeder allows operators to adjust parameters at the point of use with no control cords.

Durable design reduces downtime.
Impactresistant case and the elimination of feeder control cords provides a solid solution to last in harsh environments.

Easy process changeover. Simply connect the ArcReach® SuitCase® feeder to your weld lead and you are ready to go. The power source automatically switches settings to run conventional wire processes.

Easy solution for traditional wire process.
Add the flux-cored capability of the XMT® 350 FieldPro™ for fill and cap passes for increased productivity.

ArcReach® SuitCase® Control Panel

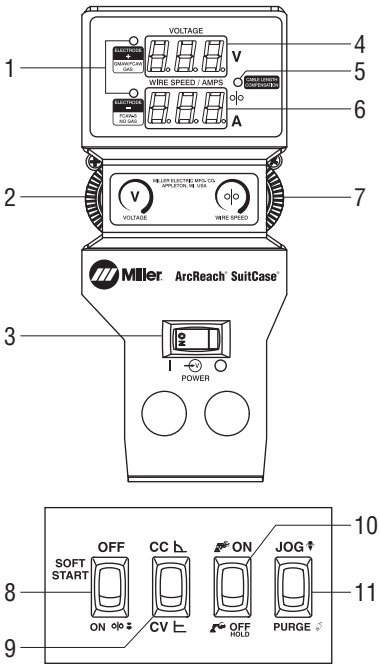

Internal Control Panel

1. Polarity Indicators
2. Voltage Control
3. Power Control Switch
4. Voltmeter
5. Cable Length Compensation (CLC) Indicator
6. Wire Speed/Amperage Meter
7. Wire Speed Control
8. Soft Start Switch
9. CC/CV Switch
10. Trigger Hold Switch
11. Jog/Purge Switch

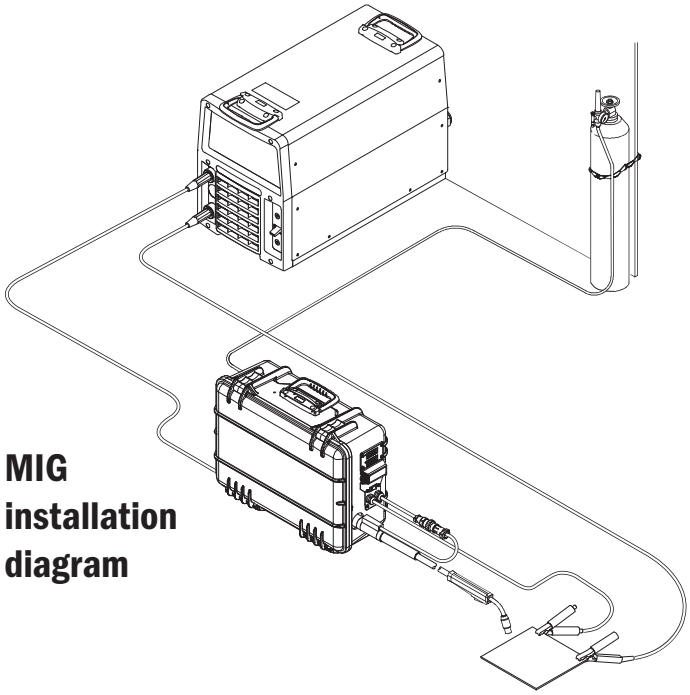

MIG installation diagram

ArcReach® SuitCase® Specifications (Subject to change without notice.)

(Use with CC or CV, DC power sources.)

Model	Input Power	IP Rating	Input Welding Circuit Rating	Wire Feed Speed	Wire Type and Diameter Capacity	Max. Spool Size Capacity	Dimensions	Net Weight
8	Operates on open-circuit voltage and arc voltage: 14–48 VDC/ 110 max.OCV	IP23	330 A at 60% duty cycle	1.3–19.8 m/min. dependent on arc voltage	**Solid wire:** 0.6–1.4 mm **Flux-cored:** 0.8–2.0 mm	203 mm 6.4 kg	H: 324 mm W: 184 mm D: 457 mm	13 kg
12			425 A at 60% duty cycle		**Solid wire:** 0.6–1.4 mm **Flux-cored:** 0.8–2.0 mm	305 mm 20 kg	H: 394 mm W: 229 mm D: 533 mm	15.9 kg

ArcReach® Smart Feeder Features

ArcReach® Smart Feeder delivers excellent RMD® and pulsed MIG welding up to 60 meters away from the power source with no control cords—twice the distance previously possible. RMD and pulsed MIG processes also help reduce weld failures and eliminate backing gas on some stainless and chrome-moly applications.

Easy process changeover. Simply connect the ArcReach® Smart Feeder to your leads and you are ready to go. All controls automatically shift to the ArcReach® Smart Feeder.

Synergic processes. RMD and pulsed MIG welding permits procedures with one wire and one gas to eliminate process switch-over time.

Durable design reduces downtime. Impactresistant case and the elimination of feeder control cords provide a solid solution to last in harsh environments.

ArcReach® SuitCase® Control Panel

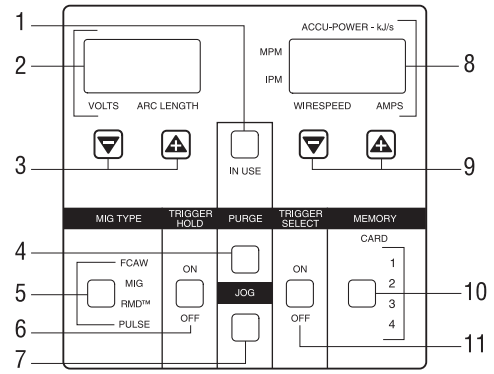

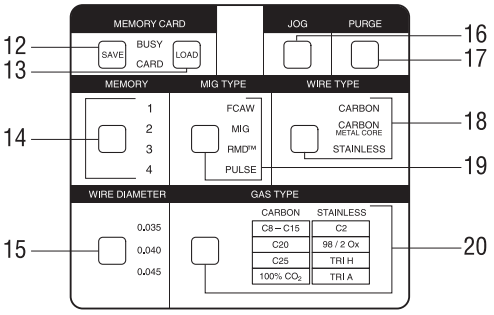

Internal Control Panel

1. In-Use Button and Indicator
2. Arc Length/Volts Display and Indicators
3. Arc Length/Volts Decrease and Increase Buttons
4. Purge Button
5. MIG Type Select Button and Indicator
6. Trigger Hold On/Off Button
7. Jog Button
8. Amps/Wire Feed Speed Display and Indicators
9. Amps/Wire Feed Speed Decrease and Increase Buttons
10. Memory Select Button and Location Indicator
11. Trigger Select On/Off Button
12. Memory Card Button
13. Memory Card Load Button
14. Memory Select Button and Location Indicator
15. Wire Diameter Select Button and Indicator
16. Jog Button
17. Purge Button
18. Wire Type Select Button and Indicator
19. MIG Type Select Button and Indicator
20. Gas Type Select Button and Indicator

ArcReach® Smart Feeder Specifications (Subject to change without notice.)

(Use with ArcReach® equipped power sources.)

Input Power*	Input Welding Circuit Rating	Wire Feed Speed	Wire Diameter Capacity	Max. Spool Size Capacity	Dimensions	Net Weight
XMT® 350 FieldPro™ connected to three-phase power or an ArcReach-equipped engine drive	275 A at 60% duty cycle	1.3–12.7 m/min. dependent on arc voltage	0.9–1.1/1.2 mm	305 mm 15 kg	H: 457 mm W: 330 mm D: 546 mm	23 kg

**XMT 350 FieldPro must be connected to three-phase power when using the ArcReach Smart Feeder. Using single-phase may cause the feeder to unpredictably interrupt welding.*

Welding Process Capabilities

The ArcReach® Smart feeder connected to an ArcReach-equipped power supply or engine drive provides standard welding process programs specifically designed for the welding of carbon steel and stainless steel pipe.
The RMD® (MIG-modified short circuit) programs and pulsed MIG programs are synergic programs designed specifically for combinations of wire type, wire diameter and shielding gas.

Carbon Steel Programs		Wire Type			
		Solid Wire			Metal-cored Wire
		0.9 mm	1.0 mm	1.1/1.2 mm	1.1/1.2 mm
Shielding Gas	100% CO_2	MIG, RMD	MIG, RMD	MIG, RMD	
	C25 (argon/25% CO_2)	MIG, RMD	MIG, RMD	MIG, RMD	RMD
	C20 (argon/20% CO_2)	MIG, RMD, Pulse	MIG, RMD, Pulse	MIG, RMD, Pulse	RMD
	C8-15 (argon/8–15% CO_2)	MIG, RMD, Pulse	MIG, RMD, Pulse	MIG, RMD, Pulse	Pulse

Stainless Steel Programs		Wire Type		
		Solid Wire		
		0.9 mm	1.0 mm	1.1/1.2 mm
Shielding Gas	C2 (argon/2% CO_2)	MIG, RMD, Pulse	MIG, RMD, Pulse	MIG, RMD, Pulse
	98/2 (argon/2% oxygen)	MIG, RMD, Pulse	MIG, RMD, Pulse	MIG, RMD, Pulse
	Tri H (90% He/7.5% Ar/2.5% CO_2)	MIG, RMD, Pulse		MIG, RMD, Pulse
	Tri A (81% Ar/18% He/1% CO_2)	MIG, RMD, Pulse		MIG, RMD, Pulse

RMD® (Regulated Metal Deposition)

A precisely controlled short-circuit metal transfer that provides a calm, stable arc and weld puddle. This provides less chance of cold lap or lack of fusion, less spatter and a higher quality root pass on pipe. The stability of the weld process lessens the puddle manipulation required by the welder and is more tolerant to hi-lo conditions, reducing training requirements. Weld bead profiles are thicker than conventional root pass welds which can eliminate the need for a hot pass, improving weld productivity. In some stainless steel applications, it may be possible to eliminate the backing (purge) gas to further improve productivity and reduce welding costs.

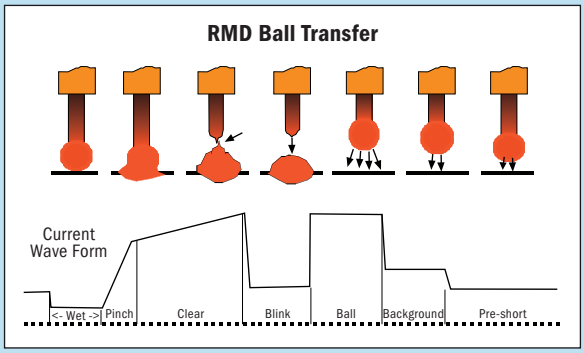

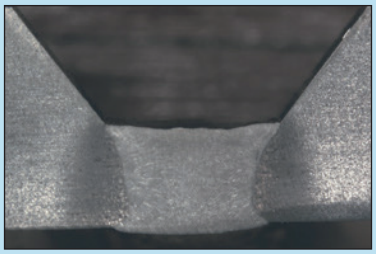

RMD® carbon steel

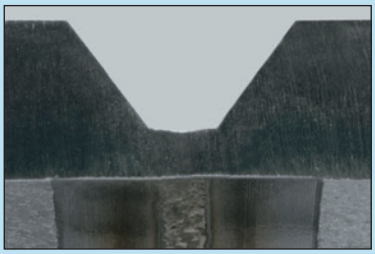

RMD® stainless

- Ideally suited to root pass welding
- Consistent side wall fusion
- Less weld spatter
- Tolerant to hi-lo fit-up conditions
- More tolerant of tip-to-work distance
- Less welder training time
- Thicker root passes can eliminate hot pass
- Eliminate backing gas on some stainless steel applications

Welding Process Capabilities (Continued)

Pulsed MIG

This method of pulse welding provides a shorter arc length, narrower arc cone and less heat input than with traditional spray pulse transfer. Since the process is closed-loop, arc wandering and variations in tip-to-work distances are virtually eliminated. This provides easier puddle control for both in-position and out-ofposition welding, reducing welder training time. The process also improves fusion and fill at the toe of the weld, permitting higher travel speeds and higher deposition.
This process coupled with RMD for root pass welding permits welding procedures with one wire and one gas to eliminate process switch-over time.

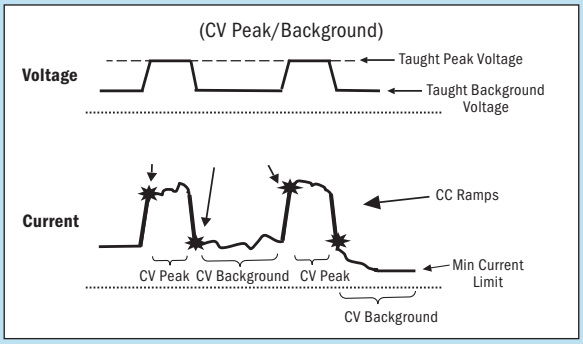

Pulsed MIG carbon

Pulsed MIG stainless

- Ideally suited to fill and cap pass welding
- Easier puddle control than conventional spray pulse
- Shorter arc lengths and narrow arc cone for out-of-position welding
- More tolerant of tip-to-work variation
- Improve fusion and fill at toe of weld
- Less heat input reduces interpass cooling time and improves weld cycle time
- Enables one-wire with one-gas weld procedures

Drive Rolls (Two required.)

Select drive rolls from chart below according to type and wire size being used. Wire inlet guide comes installed on this wire feeder.

Stainless Steel Programs	"V" groove for hard wire	"U" groove for soft wire or soft-shelled cored wires	"V" knurled for hard-shelled cored wires	"U" cogged for extremely soft wire or soft-shelled cored wires (i.e., hard facing types)
0.6 mm (.023/.025 in.)	**087130**	–	–	–
0.8 mm (.030 in.)	**053695**	–	–	–
0.9 mm (.035 in.)	**053700**	**072000**	**132958**	–
1.0 mm (.040 in.)	**053696**	–	–	–
1.1/1.2 mm (.045 in.)	**053697**	**053701**	**132957**	**083489**
1.3/1.4 mm (.052 in.)	**053698**	**053702**	**132956**	**083490**
1.6 mm (1/16 in.)	**053699**	**053706**	**132955**	**053708**
1.8 mm (.068/.072 in.)	–	–	**132959**	–
2.0 mm (5/64 in.)	–	**053704**	**132960**	**053710**
2.4 mm (3/32 in.)	–	**053703**	**132961**	**053709**

Ordering Information

Equipment and Options	Stock No.	Description	Qty.	Price
ArcReach® SuitCase® 8 MIG/FCAW Feeder	**301457**	Dinse-style connectors, with drive rolls and Euroconnector for 200 mm spool		
ArcReach® SuitCase® 12 MIG/FCAW Feeder	**301456**	Dinse-style connectors, with drive rolls and Euroconnector for 300 mm spool		
ArcReach® Smart Feeder MIG/FCAW/RMD®/Pulse Feeder	**301177**	Dinse-style connectors, with drive rolls and Euroconnector		
Flowmeter Kit	**300343**			
Spool Adapter	**047141**	For 6.4 kg spools		
Guns				
Bernard® BTB Gun 300 A (GMAW)		See Bernard® literature SP-BTB		
EuroGun A-300	**058023005**	3 m, 300 A air-cooled MIG gun		
EuroGun A-300	**058023006**	4.5 m, 300 A air-cooled MIG gun		
Bernard® Dura-Flux Gun™ (FCAW)		See Bernard® literature SP-DF		
Bernard® PipeWorx 300-15 (GMAW)	**195400**	4.6 m, 300 A air-cooled MIG gun designed for use with all ArcReach smart systems		
Power Sources				
XMT® 350 FieldPro™ Systems		See literature DC/70.1		
Big Blue® 400X Pro		See literature ED/5.7		

Date: **Total Quoted Price:**

Miller recommends Elga® consumables

Distributed by:

lastek

Miller®
The Power of Blue®

© 2022 Miller Electric Mfg. LLC